AC-1300S (Unit: mm)

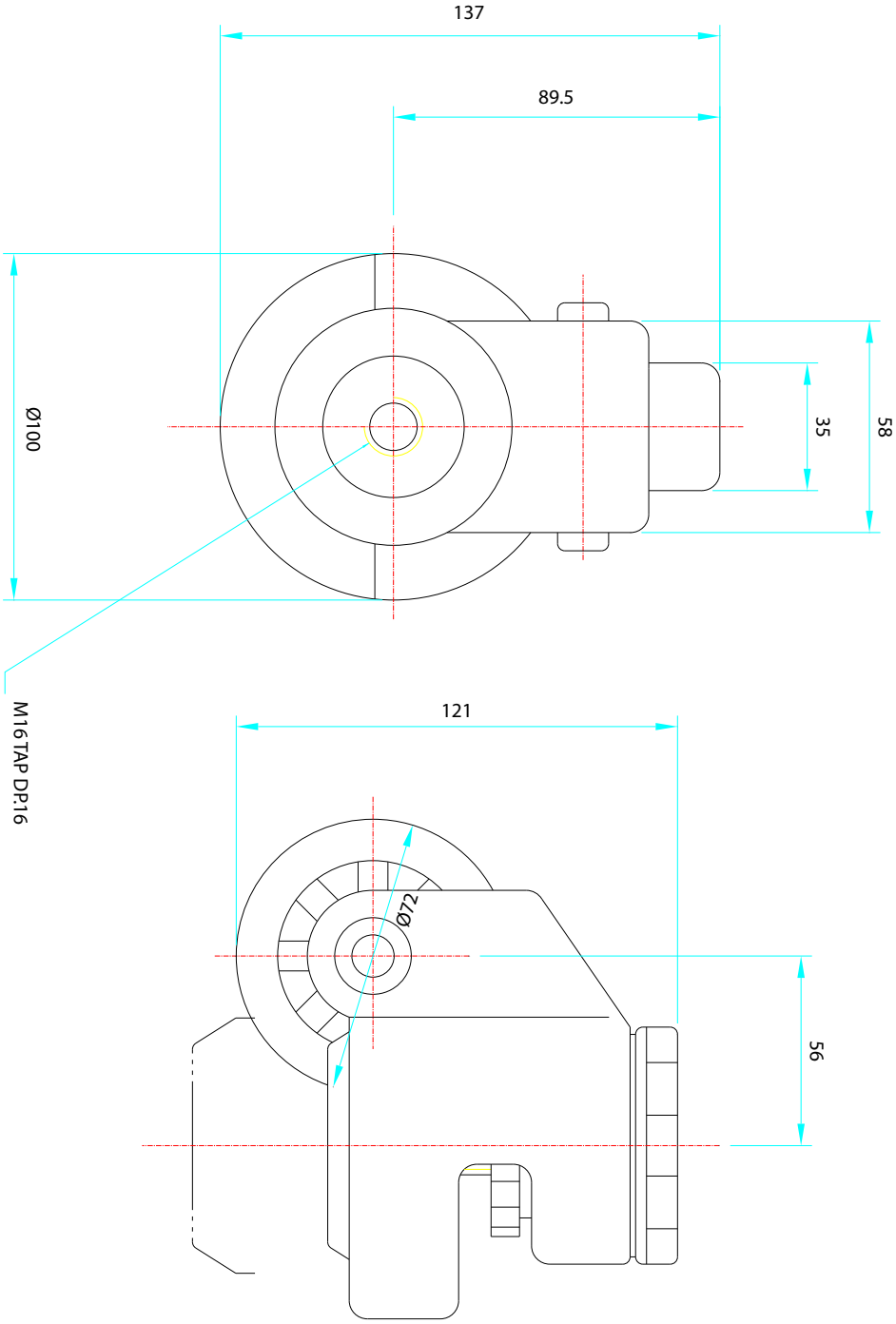

Zambus, Inc.
212 Gates Rd.
Little Ferry, NJ 07643
www.zambus.com