ACMM-100SF (Unit: mm)

CARRYMASTER®

NO.		DESCRIPTIONS	MAT'L	Q'TY	WEIGHT KG. UNIT	WEIGHT KG. TOTAL	REMARKS.

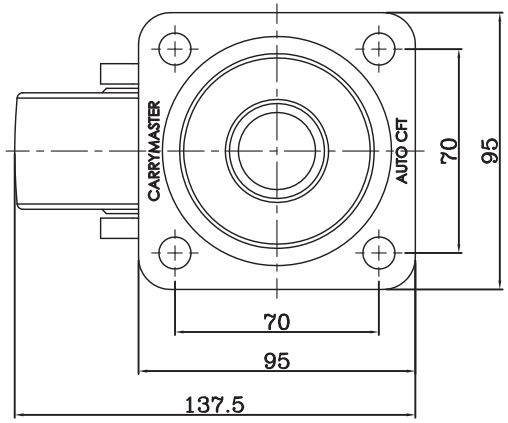

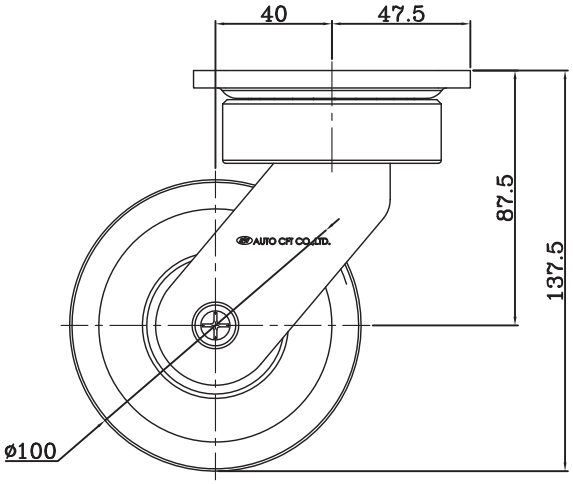

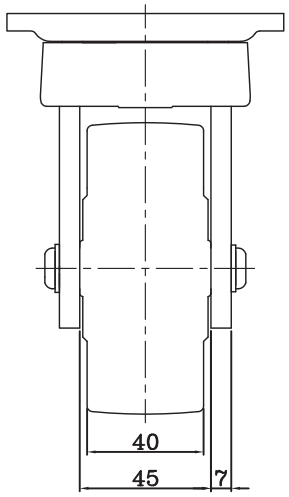

Zambus